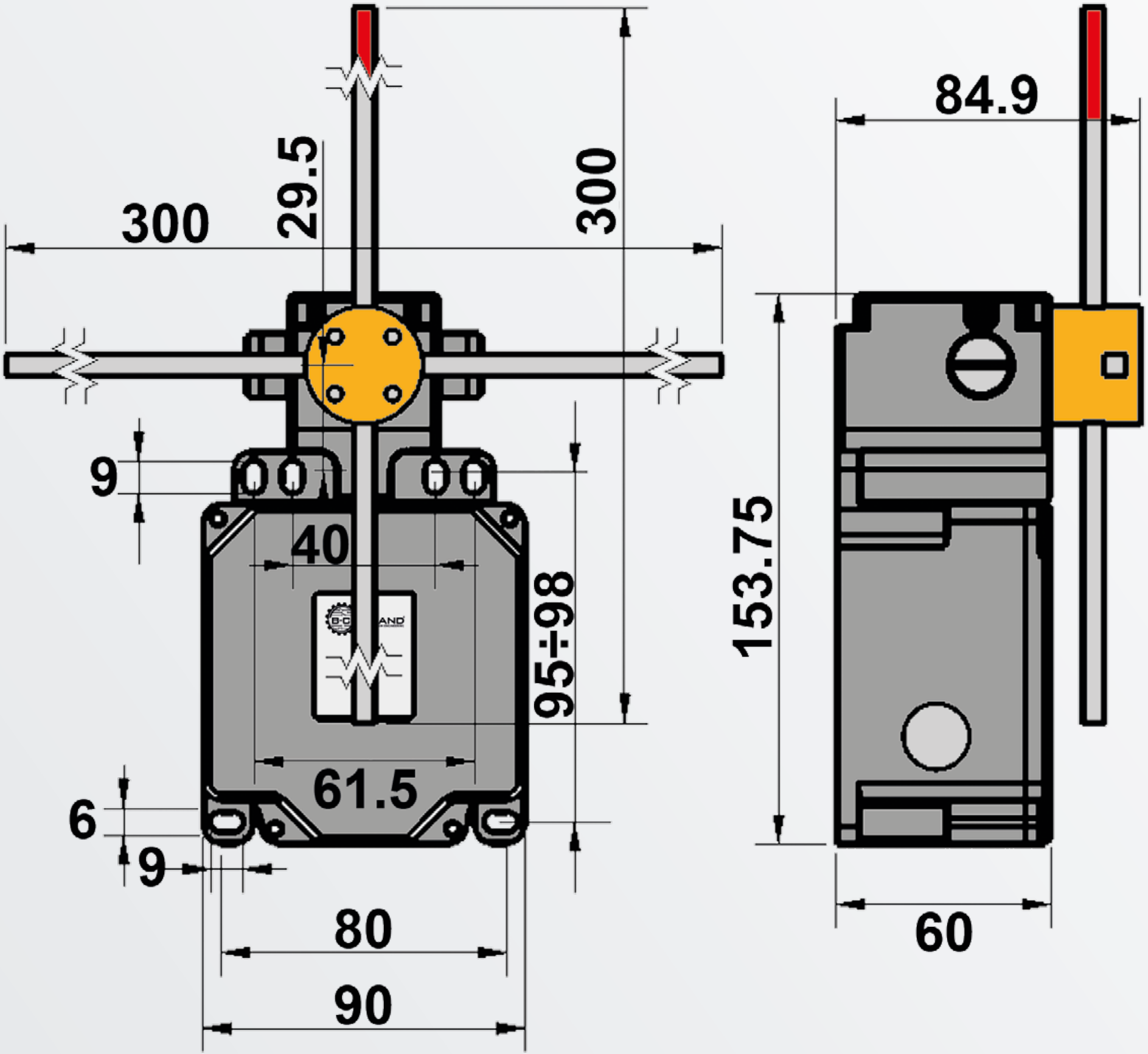
300
29.5
300
9
40
95÷98
61.5
6
9
80
90
84.9
153.75
60