SLIP RING EXD

DIMENSIONS (in mm)

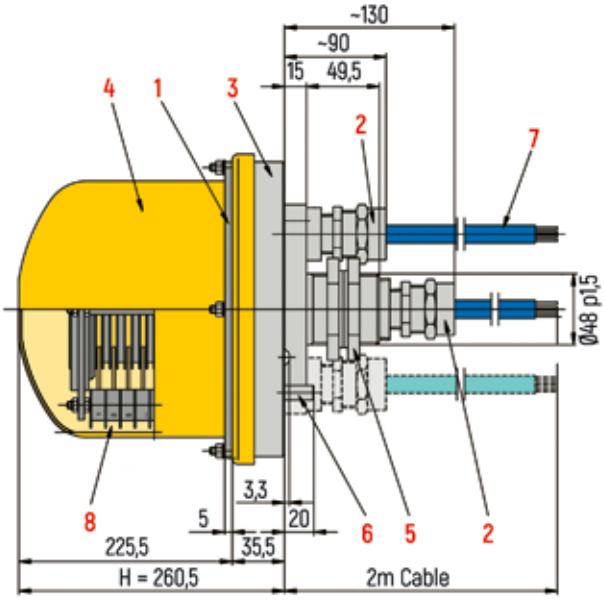

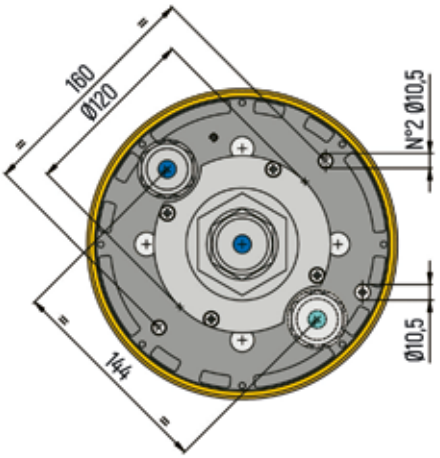

1 Special sealing ring cover
2 EX-Cable screw glands
3 Base unit
4 Cover
5 Counter locknuts
6 Fixing bolts
7 Cable
8 Screw terminals brushes

B-COMMAND
GRUETZMUEHLENWEG 46
DE-22339 HAMBURG
T. +49 40-538092-50
F. +49 40-538092-85
INFO@B-COMMAND.COM
WWW.B-COMMAND.COM