B-COMMAND®
PREMIUM ENGINEERING

Explosion-Proof

Products

WWW.B-COMMAND.COM
B-COMMAND GmbH - GRUETZMUEHLENWEG 46, 22339 DE HAMBURG
+49 40-538092-50 +49 40-538092-85 INFO@B-COMMAND.COM

Explosion-Proof Cross Limit Switch AlphaX

- 2 or 4 contacts (1NO+1NC potential-free contacts), NC contacts positive opening for safety functions, slow action switches
- Enclosure G20 cast iron (stainless steel on request)
- 3 or 5 maintained positions or multiturn switching configurations
- Optional: special painting, M25 or ½" NPT cable entry, 200 or 300mm cross bars

MARKINGS & HOMOLOGATIONS

GENERAL TECHNICAL SPECIFICATIONS

Operational ambient temperature	-40°C... +60°C
Protection degree	IP 66
Operation frequency	3600 operations/hour max

TECHNICAL SPECIFICATIONS OF THE MICROSWITCHES

Utilisation category	AC 15	Mechanical life	1 x 10^6 operations
Rated operational voltage	250 Vac	Scheme	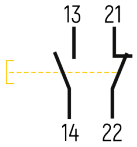
Rated operational current	3 A		
Rated thermal current	10 A		
Rated insulation voltage	300 Vac		

MAXIMUM ACTUATING DIMENSION

- Pre-travel angle for rotation contact operation: 70°-49°
- Maximum rotation angle for each maintained position: 90°
- Average angle for the mechanical tripping: 48°

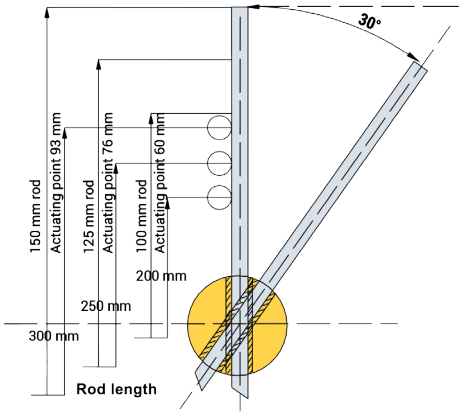

OPERATION ANGLES

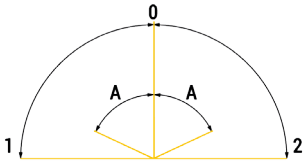

0 - Reset position
A - Microswitch working angle: 65°
1 - Maximum left handed operation: 90°
2 - Maximum right handed operation: 90°

The end of round of the "cross bar" limit switches have no limit stop (they can rotate around 360°).

DIMENSIONS (mm)

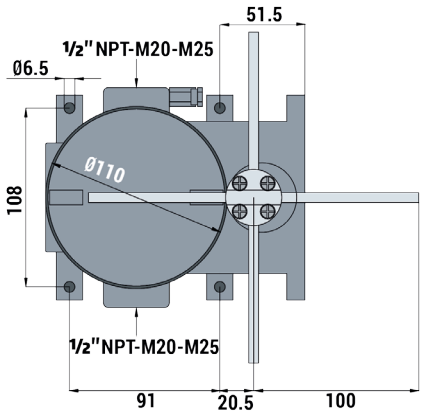

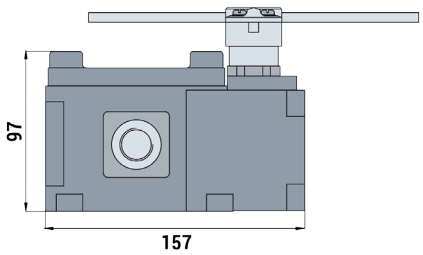

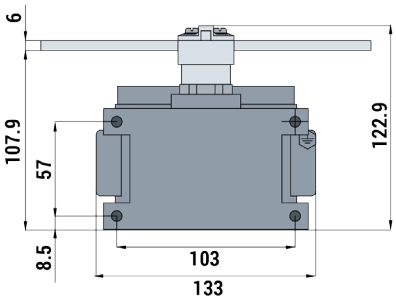

CERTIFICATIONS

Conformity to ATEX Standards

EN 60079-0: 2009 Explosive atmospheres - Equipment - General requirements
EN 60079-1: 2007 Explosive atmospheres - Equipment protection by flameproof enclosures "d"
EN 60079-31: 2009 Explosive atmospheres - Equipment dust ignition protection by enclosure "t"

Conformity to IECEx Standards

IEC 60079-0: 2011 Explosive atmospheres - Equipment - General requirements
IEC 60079-1: 2007-04 Explosive atmospheres - Equipment protection by flameproof enclosures "d"
IEC 60079-31: 2008: Explosive atmospheres - Equipment dust ignition protection by enclosure "t"

Certificate

INERIS 13ATEX0020X - IECEx INE 13.0051X

Certification for group I, IIA, IIB and IIC

MINING: I M2 Ex d I Mb (ATEX) Ex d I Mb (IECEx)
GAS Zone 1 and 2: II2G Ex d IIB T6 Gb or Ex d IIC T6 Gb (ATEX) Ex d IIB T6 or Ex d IIC T6 Gb (IECEx)
DUST Zone 21 and 22: II2D Ex tb IIIC T85°C Db IP66 (ATEX) Ex tb IIC T85°C Db IP66 (IECEx)
GAS & DUST: II2GD Ex d IIB or IIC T6 Gb Ex tb IIC T85°C Db IP66

Conformity to Community Directives

2006/95/UE Low Voltage Directive – 2006/42/CE Machinery Directive - 2014/30/UE EMC Directive

Explosion-Proof Rotary Limit Switch FRX

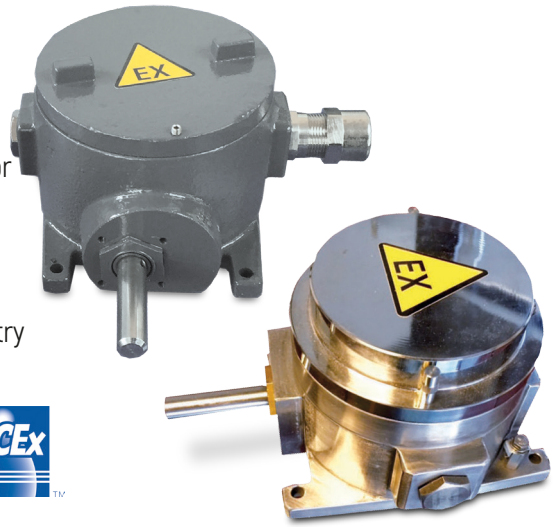

- Revolution ratios from 1:15 to 1:1578
- 2-4 contacts (1NO/1NC changevover-contacts), NC contacts positive opening for safety functions, snap action switches
- Enclosure G20 cast iron (stainless steel on request)
- 5 different cam sizes for different activation areas
- Optional: front-side flange mounting, special painting, M25 or ½'' NPT cable entry

MARKINGS & HOMOLOGATIONS

CERTIFICATIONS

Conformity to ATEX Standards

EN 60079-0: 2009 Explosive atmospheres - Equipment - General requirements
EN 60079-1: 2007 Explosive atmospheres - Equipment protection by flameproof enclosures "d"
EN 60079-31: 2009 Explosive atmospheres - Equipment dust ignition protection by enclosure "t"

Conformity to IECEx Standards

IEC 60079-0: 2011 Explosive atmospheres - Equipment - General requirements
IEC 60079-1: 2007-04 Explosive atmospheres - Equipment protection by flameproof enclosures "d"
IEC 60079-31: 2008: Explosive atmospheres - Equipment dust ignition protection by enclosure "t"

Certificate

INERIS 13ATEX0020X - IECEx INE 13.0051X

Certification for group I, IIA, IIB and IIC

MINING: I M2 Ex d I Mb (ATEX) Ex d I Mb (IECEx)
GAS Zone 1 and 2: II2G Ex d IIB T6 Gb or Ex d IIC T6 Gb (ATEX) Ex d IIB T6 or Ex d IIC T6 Gb (IECEx)
DUST Zone 21 and 22: II2D Ex tb IIIC T85°C Db IP66 (ATEX) Ex tb IIC T85°C Db IP66 (IECEx)
GAS & DUST: II2GD Ex d IIB or IIC T6 Gb Ex tb IIC T85°C Db IP66

Conformity to Community Directives

2006/95/UE Low Voltage Directive – 2006/42/CE Machinery Directive - 2014/30/UE EMC Directive

GENERAL TECHNICAL SPECIFICATIONS

Operational ambient temperature	-40°C... +60°C
Protection degree	IP 66
Maximum rotation speed	800 rev./min.

TECHNICAL SPECIFICATIONS OF THE MICROSWITCHES

Utilisation category	AC 15
Rated operational voltage	250 Vac
Rated operational current	3 A
Rated thermal current	10 A
Rated insulation voltage	300 Vac
Mechanical life	1 x 10^6 operations
Scheme	

FOOT-MOUNTED VERSION

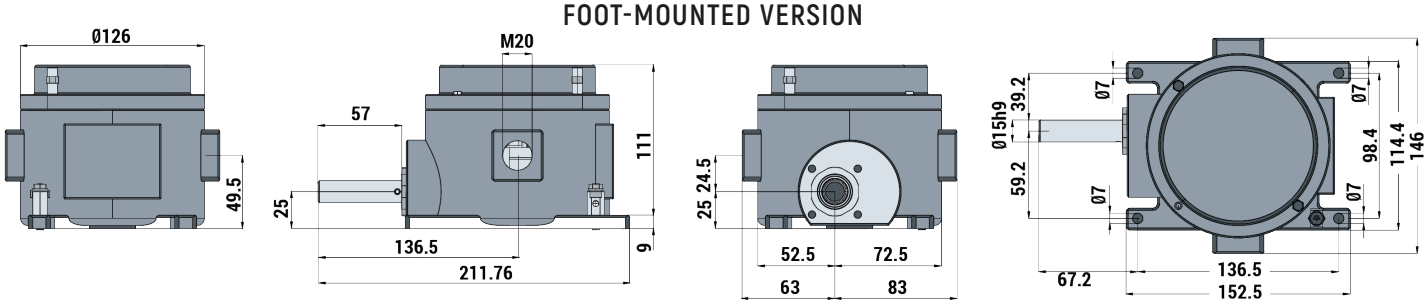

CAM REFERENCE CHART

	A	B	C	E	H
Cam	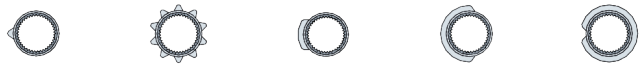				
	1 point	10 points	60° sector	180° sector	335° sector
Switching angle	20.5° ±0.5°	14.0° ±0.5°	78.0° ±0.5°	199.5° ±0.5°	344.0° ±0.5°

Standard CAM set with 2, 3 or 4 contacts

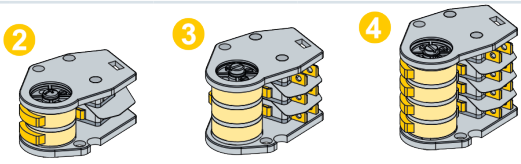

FLANGE-MOUNTED VERSION

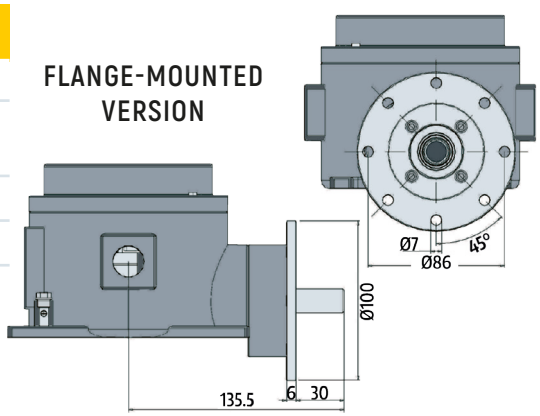

Explosion-Proof Pendant Control Station LadyX

- **For Auxiliary Devices**
- For potentially explosive areas acc. to ATEX and IECEx zones 1, 2, 21 and 22
- Enclosure Aluminium (Steel C40 or AISI316 on request)
- 4-16 Buttons (2-speed switches with NO or NC contacts)
- Optional: anti-condensation heater, special painting, mechanical interlock, special buttons with individual labeling, connection bridges for easy wiring

MARKINGS & HOMOLOGATIONS

GENERAL TECHNICAL SPECIFICATIONS

Operational ambient temperature	-20°C... +60°C
Protection degree	IP 65
Cable entry	1" NPT ANSI/ASME B1.20.01
	Thread for Cable Gland M20x1.5 or M25x1.5 or M32x1.5, tolerance medium 6H/6g

TECHNICAL SPECIFICATIONS OF THE MICROSWITCHES

Rated operational current	Max 250 Vdc / 1.1 A	Rated frequency	50/60 Hz
	Max 240 Vac / 3 A	Anti-moisture heater (optional)	Maximum power 24W
Microswitch type	Two speed switches with NO or NC contacts (All NC contacts are of the positive opening operation type)		
Wires	Min 0.75 mm² - Max 2 mm²		

DIMENSIONS (mm)

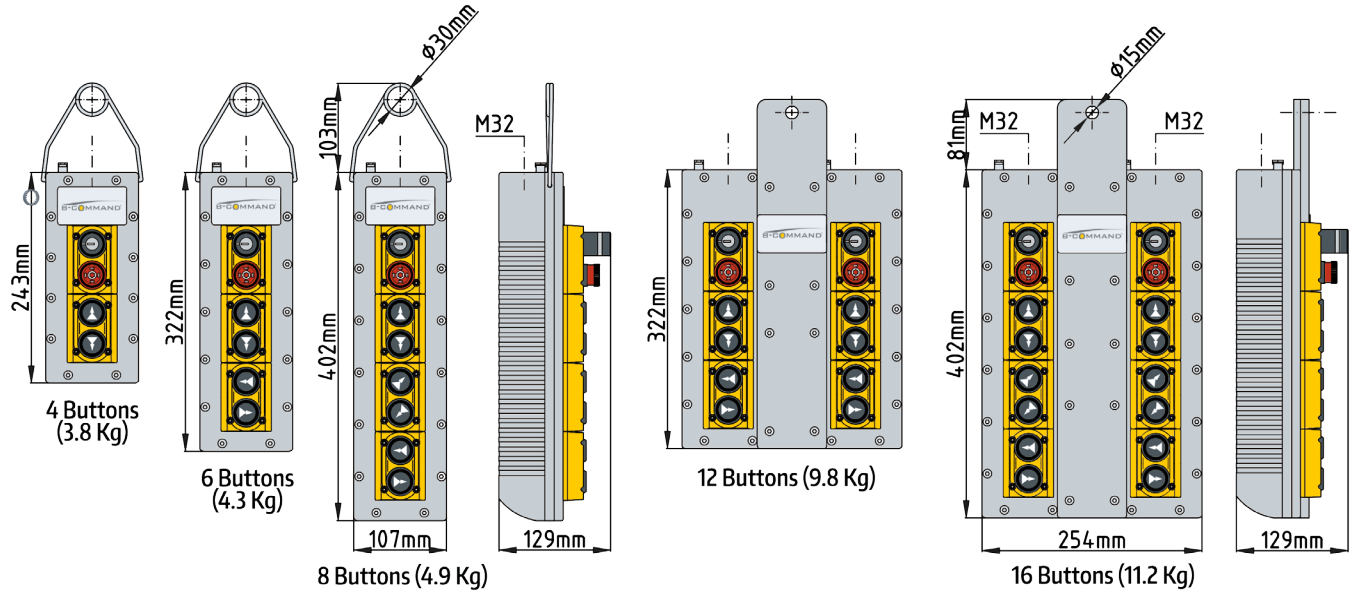

CERTIFICATIONS

Conformity to ATEX Standards – 2014/34/UE	Certificates - ATEX	Certificates - IECEx
EN 60079-0: 2012 - Explosive atmospheres. Equipment. General requirements EN 60079-1: 2014 - Explosive atmospheres. Equipment protection by flameproof enclosures "d" EN 60079-31: 2014 - Explosive atmospheres. Equipment dust ignition protection by enclosure "t"	ITS16ATEX101535X	ITS 16.0070X

Conformity to IECEx Standards	ATEX Protection	IECEx Protection
IEC 60079-0: 2012 - Explosive atmospheres. Equipment. General requirements IEC 60079-1: 2014 - Explosive atmospheres. Equipment protection by flameproof enclosures "d" IEC 60079-31: 2013 - Explosive atmospheres. Equipment dust ignition protection by enclosure "t"	II 2 G Ex db IIC T6 Gb II 2 D Ex tb IIIC T85°C Db Tamb: -20°C to +60°C	Ex db IIC T6 Gb Ex tb IIIC T85°C Db Tamb: -20°C to +60°C

Conformity to Community Directives

2014/35/UE Low Voltage Directive – 2006/42/CE Machinery Directive - 2014/30/UE EMC Directive

Explosion-Proof Modular Motor Brakes VIS

Innovative modular flameproof spring applied disc brake units

- Totally closed, IP 66, F class insulation, designed for S1 duty without ventilation
- Three phase AC or single phase DC electromagnets, power supply VAC24 to 690 50-60Hz three phase or VDC 24 to 300 with built in rectifier
- Braking torque values 3 to 16.000 Nm
- Cast iron construction (Steel frame for IEC 315 type)

MARKINGS & HOMOLOGATIONS

Ex	IEC IECEx	INMETRO	ktl	EAC Ex	CSA
Ineris 06ATEX0047	Ine 11.0037X	NCC 11.0574X	13-027793-03	AA87.B.00134	2542839

ATEX AND IECEx BRAKES ARE APPROVED FOR THE FOLLOWING AREAS

GAS

II 2 G Ex d II P 1 T P 2 Gb Tamb.: -50°C ÷ +55 (for T5 Tamb: +60°C) or -20°C ÷ +55 (for T5 Tamb: +60°C)

DUSTS

II 2 D Ex tb IIIC T P 3 Db IP66 Tamb.: -50°C ÷ +55 (for class T100°C Tamb: +60°C) or -20°C ÷ +55 (for class T100°C Tamb: +60°C)

GAS and DUSTS

II 2 GD Ex d II P 1 T P 2 Gb. Ex tb IIIC T P 3 Db IP66
Tamb.: -50°C ÷ +55 (for class T5 or T100°C Tamb: +60°C) or -20°C ÷ +55 (for class T5 or T100°C Tamb: +60°C)
I M2 Ex d I Mb Tamb.: -50°C ÷ +55°C oppure -20°C ÷+55°C
Pn are subjected to the following variations:

P1 for GAS groups if:
P1 = B: gas group IIB
P1 = C: gas group IIC

P2/P3 for temperature classes/surface temperature:
P2 = T3 P3 = T200°C | P2 = T4 P3 = T135°C | P2 = T5 P3 = T100°C
-50°C ÷ + 55°C (for class T5 o T100°C Tamb: +60°C) = Amb Temp.
-20°C ÷ + 55°C (for class T5 o T100°C Tamb: +60°C) = Amb temp for frames IEC 250/280/315
T. cable: 80°C = Cable temperature

Notes: INMETRO, KTL, TCRU approvals are related to IECEx specification

Nema brakes are CSAus approved in the following areas
Class I, Div 1, Groups C, D. Class II, Div 1, Groups E, F, G; Class III

IEC Line

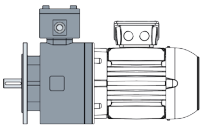

Standard IEC motor
+ VIS brake

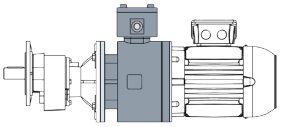

Standard IEC motor
+ VIS brake
+ gearbox unit

- Face to face version
- To be mounted onto IEC B5 motors without any modification, B5-B5 or B5-B14
- Frames sizes IEC 63 to 315
- Easy and fast installation
- 3 ph. Vac 230/400/50Hz, Vdc187, 3ph. Vac24 to 690/50-60Hz, Vdc 24 to 300

NEMA Line

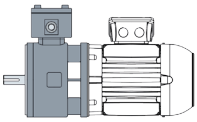

Standard NEMA motor
+ VIS brake

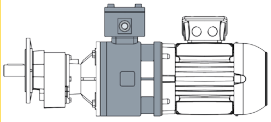

Standard NEMA motor
+ VIS brake
+ gearbox unit

- Face to face version
- Founted onto NEMA C-face motors without any modification, C-C or C-B5
- Frames sizes NEMA 56 to 404
- Easy and fast installation
- Vdc 24 to 300, DC multi voltage

COMPACT Line

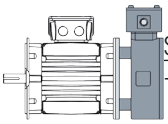

Standard motor
+ VIS brake

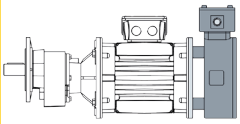

Standard motor
+ VIS brake
+ gearbox unit

- Mounting in the rear part of an electric motor or to a transmission unit
- Supplied with an hollow shaft with key suitable to be assembled to a keyed-shaft
- Frame sizes Compact 25, 150, 350, 750, E14, D18, E18, D216, E216
- Vdc187, Vdc 24 to 300, DC multi voltage

Explosion-Proof Slipring EXD

MARKINGS & HOMOLOGATIONS

CE

Ex II 2 D Ex tb IIIC T70°C or T75°C Db IP65
ZONE 21 & 22

GENERAL TECHNICAL SPECIFICATIONS

Housing	Aluminium
Positioning	Vertical axis with the cover assembled on the top
Connections	Rings and brushes are wired with 2m long cable
Cable entry	Thanks to a cable gland for the rings and through the lateral cable clamp entry for the brush holders
Anti-condensation	Anti-condenstion heater (on demand)

HARMONIZED RULES

Norms: CEI EN 60079-0: 2012 / CEI EN 60079-31: 2014
UNI EN 1127-1 / CEI EN 60529 / CEI EN 60529/A1
Directives: 2014/34/UE - RoHS 2011/65/UE

CERTIFICATION OF TYPE	QUALITY NOTIFICATION
BVI 09 ATEX 0046 X	BVI 17 ATEX 0019 Q

Conformity to Community Directives

2014/35/UE Low Voltage Directive – 2006/42/CE Machinery Directive - 2014/30/UE EMC Directive

ELECTRICAL FEATURES

Nominal voltage	400 V ac - dc
Nominal current	Ith 4A - 7A - 16A - 34A
Protection degree	IP 65
Maximum rotating speed	50 revs / min
Test voltage	2.5 kV for 1 min.
Operating temperature	T70°C = -20°C... +40°C T75°C = -20°C... +50°C

SINGLE COMPOSITIONS

Part number	N° Rings	H (mm)
G EXD B4	4 x 7A + PTC	260.5
G EXD B6N	6 x 7A	260.5
G EXD B10	10 x 7A + PTC	260.5
G EXD B12N	12 x 7A	260.5
G EXD B20	20 x 7A + PTC	260.5
G EXD B22N	22 x 7A	260.5
G EXD C10N	10 x 16A	260.5
G EXD D4	4 x 34A + PTC	260.5
G EXD D4N	4 x 34A	260.5

MIXED COMPOSITIONS

Part number	N° Rings	H (mm)
G EXD C4 A16N	4 x 16A + 16 x 4A	260.5
G EXD C4 B4	4 x 16A + 4 x 7A + PTC	260.5
G EXD C4 B6N	4 x 16A + 6 x 7A	260.5
G EXD C4 B8	4 x 16A + 8 x 7A + PTC	260.5
G EXD C4 B10N	4 x 16A + 10 x 7A	260.5
G EXD C8 A6	8 x 16A + 6 x 4A + PTC	260.5
G EXD C8 A8N	8 x 16A + 8 x 4A	260.5
G EXD C8 B4N	8 x 16A + 4 x 7A	260.5
G EXD D4 A6N	4 x 34A + 6 x 4A	260.5
G EXD D4 B2N	4 x 34A + 2 x 7A	260.5
G EXD D4 B4N	4 x 34A + 4 x 7A	260.5

DIMENSIONS

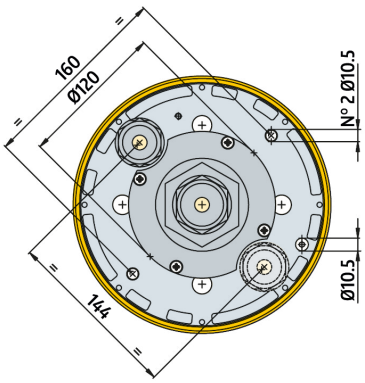

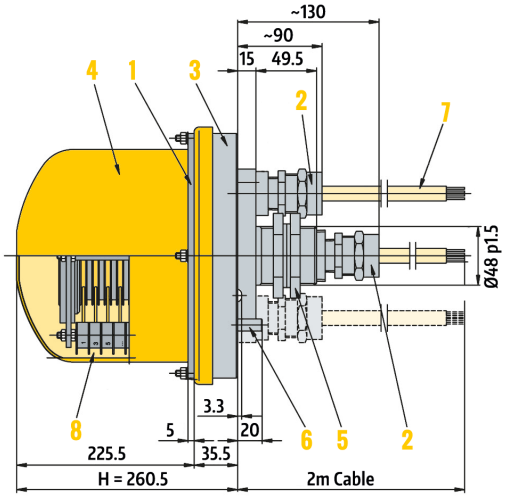
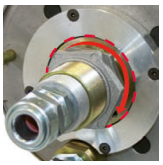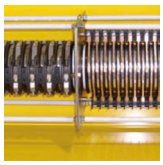
1 - Special sealing ring cover
2 - EX-Cable screw glands
3 - Base unit
4 - Cover
5 - Counter locknuts
6 - Fixing bolts
7 - Cable
8 - Screw terminals brushes