B-COMMAND®

ROTARX©

Hybrid Slip Rings

HD-SDI (1080P) + ELECTRIC

High-Performance Power,
Signal and Media Transmission

Our other available catalogues:

COMPACT SLIP RINGS SOLUTIONS (General catalogue)	*(256 pages)*
CAPSULATED MINIATURE SLIP RINGS	*(44 pages)*
AUTOMATION SLIP RINGS	*(32 pages)*
THROUGH-BORE SLIP RINGS	*(68 pages)*
PANCAKE SLIP RINGS - with Housing - without Housing	*(42 pages)*
SEPARATE SLIP RINGS	*(28 pages)*
FASTON SLIP RINGS	*(24 pages)*
MINIATURE HYBRID SLIP RINGS	*(24 pages)*
HYBRID SLIP RINGS - Ethernet + Electric	*(34 pages)*
HYBRID SLIP RINGS - Pneumatic / Liquid + Electric	*(72 pages)*
HYBRID SLIP RINGS - USB + Electric	*(30 pages)*
HYBRID SLIP RINGS - Fiber Optical + Electric	*(44 pages)*
HYBRID SLIP RINGS - Coax + Electric	*(40 pages)*

CONTENT

THE COMPANY	4
SLIP RINGS TECHNOLOGY	6
SLIP RINGS APPLICATIONS	8
HYBRID SLIP RINGS, HD-SDI (1080p) + Electric	10
- RX-SDI0 Series	12
- RX-SDI2 Series	13
- RX-SDI3 Series	14
- RX-SDI5 Series	16
CUSTOMIZED SLIP RINGS	18
NOTES	24
REQUEST FORM	25

The Company

Offices of our Headquarters Hamburg

Quality and Safety

B-COMMAND was founded in 1995. Since more than 20 years the company has put its focus on **production and sales of electro technical components to all parts of the globe.**

In the early years B-COMMAND focused on electro-mechanical control solutions mainly for the national crane market. Throughout the years the sales area was widened to many international countries and the second main product focus became wind power technology. The company started developing and manufacturing of special limit switches for wind turbines which are still one of the major product lines today.

After more than 10 years of growth and success with electro-mechanical products, another different technology division was established: **electrical transmission technology.**
Due to many analogies with electro-mechanical products and many skilled engineers the new technology focus for transmission of power and signals had been implemented.

Production & Warehouse

In the beginning the products for electrical transmission technology included simple slip rings for transmitting small power ratings from fixed to rotating parts into machines.

Today, in times of Industry 4.0 and industrial networks, the program contains more than **20.000 possible solutions with combined power and signal transmission, high-frequency solutions, different housing types and super-miniature solutions.**

QUALITY MANAGEMENT
Certification 2017

Our technical expertise guarantees the right solution for your applications.

Since more than 10 years the company is certified according to **DIN EN ISO9001:2015 by TÜV in Germany.** All management and production processes are created and approved according to international standards. Especially **a flexible production structure allows short delivery times also for small volume orders or prototypes.**
The purchasing organization of B-COMMAND is internationally targeted. Raw material and production components are sourced from best-rated suppliers worldwide. A network of specialists for all materials is available for developing the best solution for the customers requirements resulting in a perfect fitting product for all individual projects.

CONTACT

B-COMMAND GmbH

Gruetzmuehlenweg 46
22339 DE Hamburg

T. +49 40-538092-50
F. +49 40-538092-85
E. info@b-command.com
W. www.b-command.com

B-COMMAND has an international sales network of distributors and sales partners for all regions. Some of the distributors even offer spare parts or series demand products from their own stock in the different countries.

All activities at B-COMMAND are focused on customer satisfaction. Creating perfect-fitting technical solutions with best quality for marked-based prices – this is our passion.

Slip Rings Technology

Slip rings are essential electromechanical parts of commercial or industrial machinery. They have to ensure transfer of data, media, energy and electrical signals in best possible conditions. This can only be realized by combination of a targeted design process, selection of best raw materials, professional production conditions, 100% quality control and skilled assembling on customer side.

PREMIUM ENGINEERING

With many years experience and a deep knowledge of all relevant engineering disciplines, B-COMMAND engineering team can provide fast and innovative design solutions for customers around the world. Our engineers are constantly developing new designs and use new materials across a wide spectrum of diverse environments.

In order to ensure only premium-quality products B-COMMAND is able to undertake following tests in our in-house laboratory:

- Humidity Test
- Temperature Test
- Protection Degree Test
- Vibration / Shock Test
- High Pressure / Vacuum Test
- Torque Test
- High Voltage Test
- Large Current Test
- Salt Spray Test
- Load Test
- Electrical Noise Test
- Contact Resistance Test
- Lifetime Test
- Insulation Test
- Frequency Test
- Friction Test

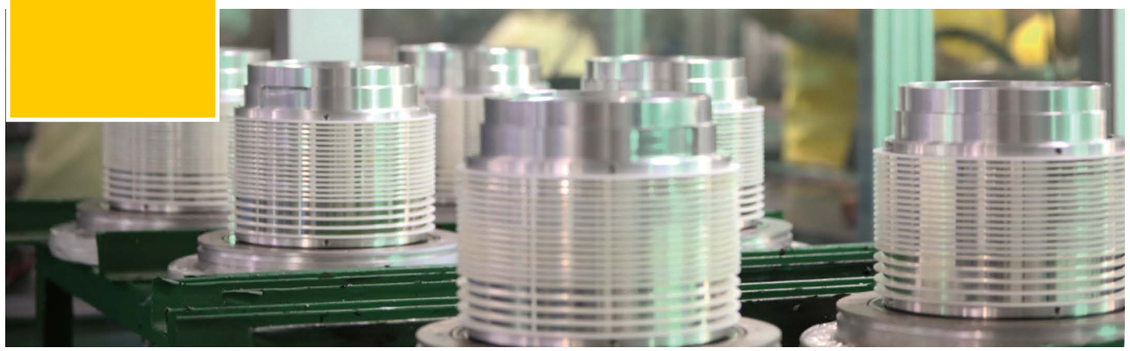

TOTAL QUALITY CONTROL

High production depth is the key to total quality control. Therefore B-COMMAND has established extended electrical and mechanical production capabilities. Different automatic and semi-automatic multiple axis CNC machining centers, grinding machines, milling machines and coating machines offer a wide range of mechanical options during production process. Only experts with long-term knowledge are operating our machinery in order to grant best quality products for our customers.

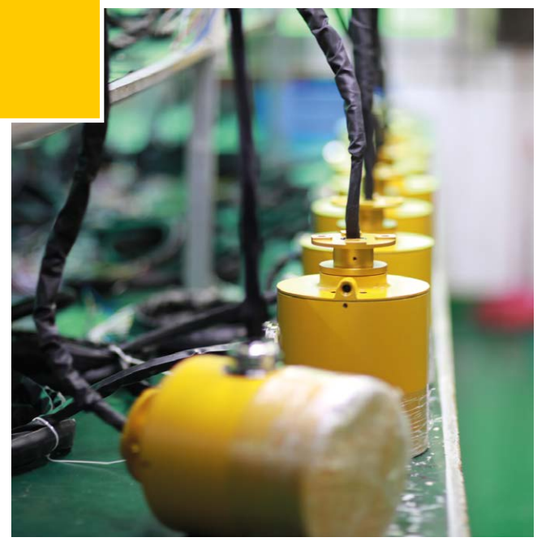

FLEXIBILITY

For B-COMMAND flexibility is not just a word, it is the basis of our organization. Flexible sales and R&D structures with capacity for extensive project inquiries from our customers are as well allocated as flexible production structures with high-volume series production and also fast-track options for small volume orders.

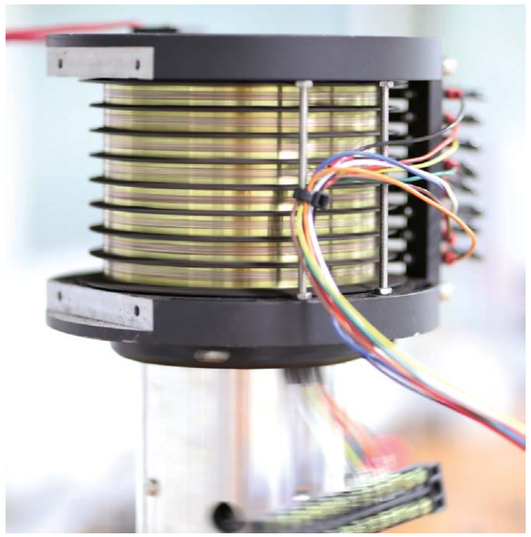

INNOVATION

The willingness of lifelong-learning and permanent interest in new technological trends sets our engineering team apart. Industrial communication and electrical complexity of everyday life have moved to a new level and they are still developing fast. We keep an eye on all new technologies, new applications, new materials and forward-looking innovations which can improve or re-invent our products.

Slip Rings Applications

WIND POWER TECHNOLOGY

- Small Wind Turbines
- Multi-MW-Turbines
- Signal & Power Transmission

AEROSPACE TECHNOLOGY

- Drones
- Radars
- Thermal Imaging

ROBOTIC TECHNOLOGY

- Production Robots
- Inspection Robots
- Packaging Robots

CAMERA TECHNOLOGY

- TV-Cameras
- Security Cameras
- Inspection Cameras

CRANE TECHNOLOGY

- Post Cranes
- Tower Cranes
- Mobile Cranes

AMUSEMENT TECHNOLOGY

- Pendulum Rides
- Observation Wheel
- Merry-Go-Round

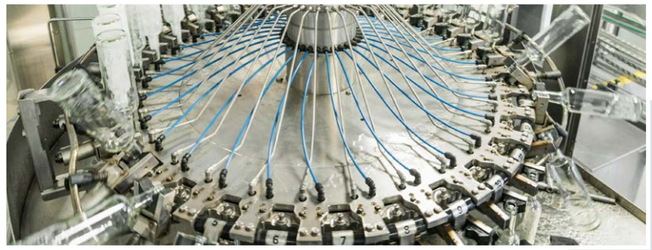

PACKAGING TECHNOLOGY

- Packaging Robots
- Filling Machines
- Capping Machines

STAGE TECHNOLOGY

- Rotating Stages
- Rotating Lights
- Revolving Platforms

RX-SDI Series

HI-DEF Video Transmission | Compact | High Circuit Density | RoHS 2 2011/65/EU | CE

The hybrid slip rings with HD-SDI transmission are especially made for transmission of high-definition video signals and power or electrical signals. The slip rings can transmit uncompressed high quality video signals with max. 2.5GHz from fixed to rotary parts.

Beside max. 1 HD-SDI (1080p) line the slip ring can be equipped with max. 24 power lines (max. 10A) or 48 signal lines (max. 5A). The housing is made of solid aluminium and offers maximum protection for electrical and media transmission components.

For electrical transmission hybrid slip rings combine the best advanced fiber brush technology and precious metal or gold-to-gold multi-contacting, they offer low electrical noise for high data rate field bus transmission, low contact pressure for long lifetime and they are maintenance free.

We offer standardized & modularized design and fully customizable products according to the special requirements of customers in different applications.

If you have specific customized requirements, please feel free to consult us in order to create the most suitable recommendation for your specification.

ADVANTAGES

- Transmission of High-Definition Video Signals
- Transfer Rate up to 2.5GHz
- Combined Power & Signal Transmission
- Small & Compact Design
- Low Contact Resistance
- Long Lifetime
- Maintenance Free
- 360° Continuous Rotation

MAIN APPLICATIONS

- HD & UHD Cameras
- Television Camera Technology
- Security Cameras
- Photography
- Monitoring Systems
- Military Systems
- Virtual Reality

PRODUCT CODE

RX	-	AAA	BB	C	-	DDD	-	E	FF	GG	S
		1	2	3		4		5	6	7	8

Example: RX-SDI561-072-20810S
(1) Hybrid Slip Ring HD-SDI with (2) Outer Diameter approx. 56Mm, (3) 1 HD-SDI channel, (4) Length approx. 72mm, (5) Signal transmission 5A, (6) 8 rings for power transmission, (7) 10 rings for signal transmission, (8) Standard Version

1	Series	SDI - Hybrid Slip Rings HD-SDI
2	Outer Diameter	From 6.3mm to 56mm (see drawings for details)
3	Number of channels	1 HD-SDI channel (more channels on request)
4	Length	From 18mm to 155.6mm (see drawings for details)

5	Signal Level	0 - No Signal transmission
		1 - 2A Signal transmission
		2 - 5A Signal transmission
6	Number of Power Circuits	From 2 rings to 24 rings each 10A
7	Number of Signal Circuits	From 2 rings to 48 rings
8	Version	S - Standard
		C - Customized

SPECIFICATIONS

HYBRID HD-SDI SLIP RINGS SPECIFICATION			
NUMBER OF CIRCUITS	2-24 for power transmission	2-48 for signal transmission	1 channel for HD-SDI transmission
HD-SDI CHANNEL SPECIFICATIONS			
FREQUENCY RATE	DC-3GHz	INSERTION LOSS	0.65dB/1GHz Max
INSERTION LOSS TYPICAL	+/-0.05dB	RETURN LOSS	-18dB/1GHz Max
INPUT AND OUTPUT	RG-179/U	WAVE RATIO TYPICAL	+/-0.05
VOLT STANDING WAVE RATIO	VSWR≤1.3	CONNECTOR TYPES	BNC/F
IMPEDANCE	75 ohms	RATING CURRENT	DC1A Max
ELECTRICAL SPECIFICATIONS			
CURRENT RATING	Power transmission circuits:	10A	
	Signal transmission circuits:	Type SDI561: 5A	All other types: 2A
VOLTAGE RATING	Power transmission circuits:	440VAC/DC	
	Signal transmission circuits:	440VAC/DC	
ELECTRICAL NOISE	max 10mΩ		
INSULATION RESISTANCE	≥1000 MΩ @ 500 VDC		
LEAD CABLE SIZE	Power transmission circuits: AWG28 Teflon		Signal transmission circuits: AWG28 Teflon
LEAD CABLE LENGTH	Standard 300mm (Rotor/Stator)		
DIELECTRIC STRENGTH	500VAC @ 50Hz, 60s		
MECHANICAL SPECIFICATIONS			
WORKING LIFE	50 Million Revs		
ROTATING SPEED	0-50 rpm		
TEMPERATURE RANGE	-30°C to +80°C		
OPERATING HUMIDITY	0~85% RH		
CONTACT MATERIAL	Gold-Gold		
HOUSING MATERIAL	Aluminium Alloy		
TORQUE	0.05N.m; +0.01N.m/6 rings		
PROTECTION DEGREE	IP51 (higher or lower on request)		

RX-SDI061

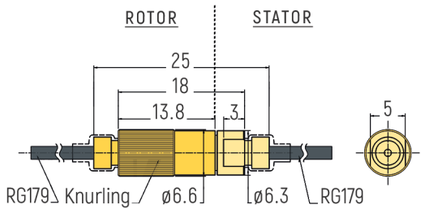

MODEL	LENGTH (mm)	NUMBER OF CIRCUITS			HD-SDI
		Power 10A	Signal / 2A	Signal / 5A	
RX-SDI061-018-00000S	18	-	-	-	1 channel RG-179(75Ω) 2.3Ghz

RX-SDI221

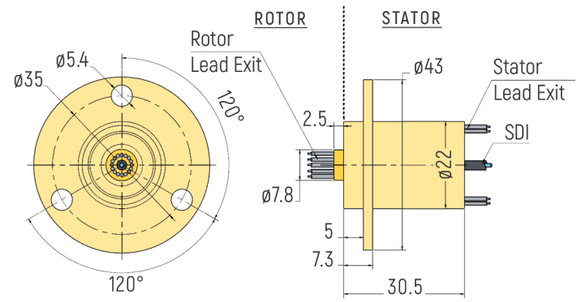

MODEL	LENGTH (mm)	NUMBER OF CIRCUITS			HD-SDI
		Power 10A	Signal / 2A	Signal / 5A	
RX-SDI221-031-10016S	30.5	-	16	-	1 channel RG-179(75Ω) 2.3Ghz

RX-SDI241

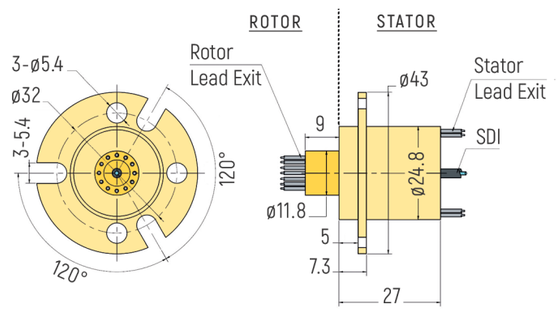

MODEL	LENGTH (mm)	NUMBER OF CIRCUITS			HD-SDI
		Power 10A	Signal / 2A	Signal / 5A	
RX-SDI241-027-10012S	27	-	12	-	1 channel RG-179(75Ω) 2.3Ghz

RX-SDI321-063

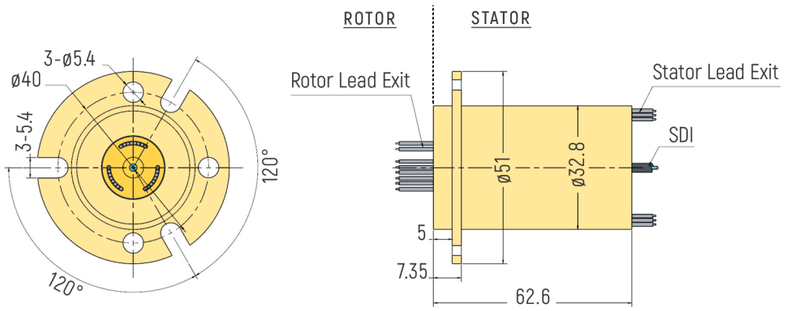

MODEL	LENGTH (mm)	NUMBER OF CIRCUITS			HD-SDI
		Power 10A	Signal / 2A	Signal / 5A	
RX-SDI321-063-10024S	62.6	-	24	-	1 channel RG-179(75Ω) 2.3Ghz

RX-SDI321-084

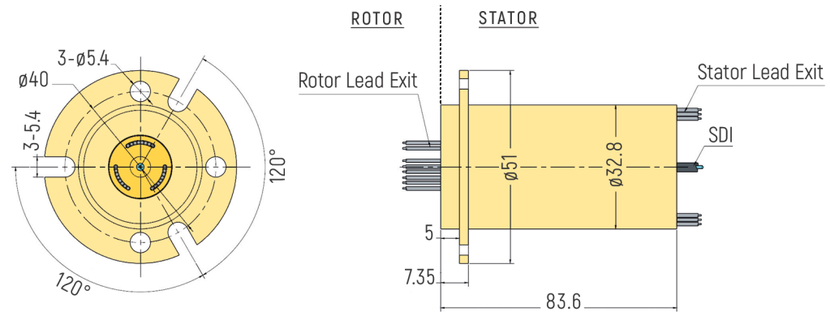

MODEL	LENGTH (mm)	NUMBER OF CIRCUITS			HD-SDI
		Power 10A	Signal / 2A	Signal / 5A	
RX-SDI321-084-10030S	83.6	-	30	-	1 channel RG-179(75Ω) 2.3Ghz

RX-SDI561

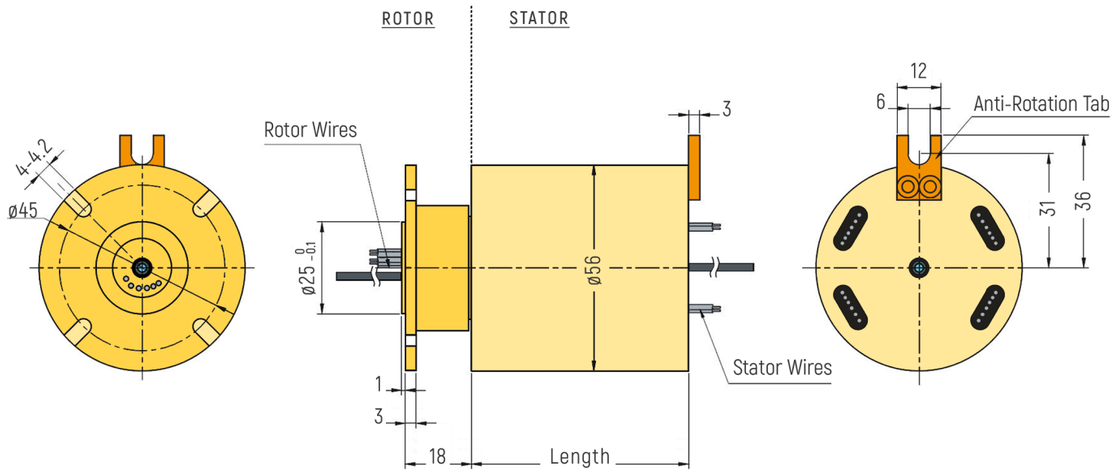

MODEL	LENGTH (mm)	NUMBER OF CIRCUITS			HD-SDI
		Power 10A	Signal / 2A	Signal / 5A	
RX-SDI561-027-20002S	26.8	-	-	2	1 channel RG-179(75Ω) 2.3Ghz
RX-SDI561-027-00200S	26.8	2	-	-	1 channel RG-179(75Ω) 2.3Ghz
RX-SDI561-030-20003S	29.6	-	-	3	1 channel RG-179(75Ω) 2.3Ghz
RX-SDI561-030-00300S	29.6	3	-	-	1 channel RG-179(75Ω) 2.3Ghz
RX-SDI561-038-20006S	38	-	-	6	1 channel RG-179(75Ω) 2.3Ghz
RX-SDI561-038-20204S	38	2	-	4	1 channel RG-179(75Ω) 2.3Ghz
RX-SDI561-038-20402S	38	4	-	2	1 channel RG-179(75Ω) 2.3Ghz
RX-SDI561-038-00600S	38	6	-	-	1 channel RG-179(75Ω) 2.3Ghz
RX-SDI561-055-20012S	54.8	-	-	12	1 channel RG-179(75Ω) 2.3Ghz
RX-SDI561-055-20210S	54.8	2	-	10	1 channel RG-179(75Ω) 2.3Ghz
RX-SDI561-055-20309S	54.8	3	-	9	1 channel RG-179(75Ω) 2.3Ghz
RX-SDI561-055-20606S	54.8	6	-	6	1 channel RG-179(75Ω) 2.3Ghz
RX-SDI561-055-20804S	54.8	8	-	4	1 channel RG-179(75Ω) 2.3Ghz
RX-SDI561-055-21002S	54.8	10	-	2	1 channel RG-179(75Ω) 2.3Ghz
RX-SDI561-055-01200S	54.8	12	-	-	1 channel RG-179(75Ω) 2.3Ghz
RX-SDI561-072-20018S	71.5	-	-	18	1 channel RG-179(75Ω) 2.3Ghz
RX-SDI561-072-20216S	71.5	2	-	16	1 channel RG-179(75Ω) 2.3Ghz
RX-SDI561-072-20414S	71.5	4	-	14	1 channel RG-179(75Ω) 2.3Ghz
RX-SDI561-072-20612S	71.5	6	-	12	1 channel RG-179(75Ω) 2.3Ghz
RX-SDI561-072-20810S	71.5	8	-	10	1 channel RG-179(75Ω) 2.3Ghz
RX-SDI561-072-21008S	71.5	10	-	8	1 channel RG-179(75Ω) 2.3Ghz
RX-SDI561-072-21206S	71.5	12	-	6	1 channel RG-179(75Ω) 2.3Ghz
RX-SDI561-072-21404S	71.5	14	-	4	1 channel RG-179(75Ω) 2.3Ghz
RX-SDI561-072-21602S	71.5	16	-	2	1 channel RG-179(75Ω) 2.3Ghz
RX-SDI561-089-20024S	88.4	-	-	24	1 channel RG-179(75Ω) 2.3Ghz
RX-SDI561-089-20420S	88.4	4	-	20	1 channel RG-179(75Ω) 2.3Ghz
RX-SDI561-089-20618S	88.4	6	-	18	1 channel RG-179(75Ω) 2.3Ghz
RX-SDI561-089-21212S	88.4	12	-	12	1 channel RG-179(75Ω) 2.3Ghz
RX-SDI561-089-21806S	88.4	18	-	6	1 channel RG-179(75Ω) 2.3Ghz
RX-SDI561-089-02400S	88.4	24	-	-	1 channel RG-179(75Ω) 2.3Ghz
RX-SDI561-106-20030S	105.2	-	-	30	1 channel RG-179(75Ω) 2.3Ghz
RX-SDI561-106-20228S	105.2	2	-	28	1 channel RG-179(75Ω) 2.3Ghz
RX-SDI561-106-20426S	105.2	4	-	26	1 channel RG-179(75Ω) 2.3Ghz
RX-SDI561-106-20624S	105.2	6	-	24	1 channel RG-179(75Ω) 2.3Ghz
RX-SDI561-122-20036S	122	-	-	36	1 channel RG-179(75Ω) 2.3Ghz
RX-SDI561-122-20432S	122	4	-	32	1 channel RG-179(75Ω) 2.3Ghz
RX-SDI561-122-20630S	122	6	-	30	1 channel RG-179(75Ω) 2.3Ghz
RX-SDI561-139-20042S	138.8	-	-	42	1 channel RG-179(75Ω) 2.3Ghz
RX-SDI561-139-20438S	138.8	4	-	38	1 channel RG-179(75Ω) 2.3Ghz
RX-SDI561-156-20048S	155.6	-	-	48	1 channel RG-179(75Ω) 2.3Ghz

Customized Slip Rings

HYBRID SLIP RING FOR WATER, POWER AND SIGNAL TRANSMISSION

- 12 x 10A power, 1 x gigabit Ethernet, 1 x water leadthrough
- Harting connector for power lines
- Housing material aluminium

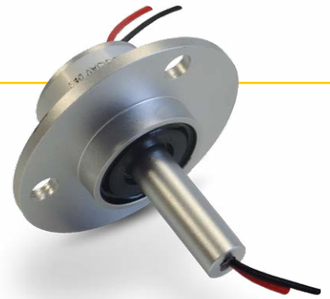

MINIATURE METAL HOUSING WITH ELONGATED ROTOR SHAPE

- Special rotor design acc. to customer specification
- 4 x 2A signal rings
- Protection degree IP65

MEDIUM SIZE SLIP RING WITH MASSIVE FLANGE

- Aluminium rotor flange with customized boreholes
- Flange thickness 13mm
- Protection degree IP65

HYBRID MEDIUM SIZE HOLLOW-SHAFT SLIP RING

- 10 x 10A signal transmission + EtherCat signals
- Massive housing for heavy-duty-applications
- Special flange and double-anti-rotation-tabs

MEDIUM SIZE SLIP RING WITH MASSIVE FLANGE

- Axial cable outtake rotor, radial cable outtake stator
- Steel housing in customized color
- Special cable protection sleeve

LARGE SLIP RING FOR MARITIME APPLICATIONS

- Outer diameter 1.4 meters, inner diameter 0.7 meters
- Housing material steel, color similar to maritime vessel
- Inspection porthole

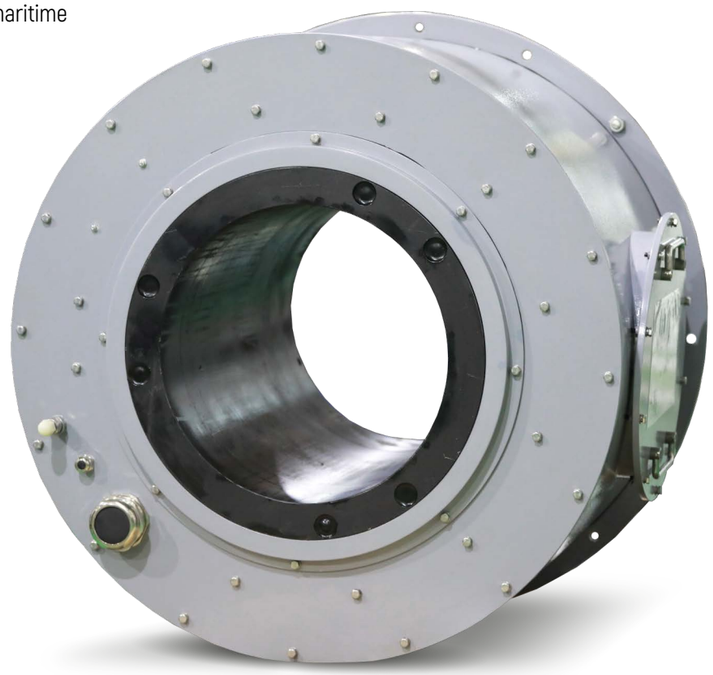

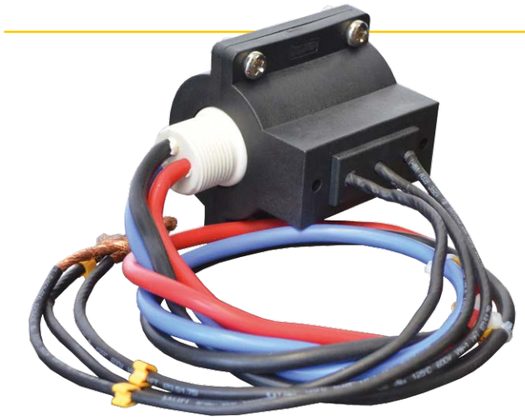

MINIATURE POWER SLIP RING WITH CUSTOMIZED HOUSING

- 3 x 63A power transmission on minimum space
- Special plastic housing
- Cable color code according to customer requirement

PANCAKE SLIP RING WITHOUT HOUSING

- Special diameter according to customer machine
- 2 rings for power transmission
- Brushholder with customized fixing holes and cable

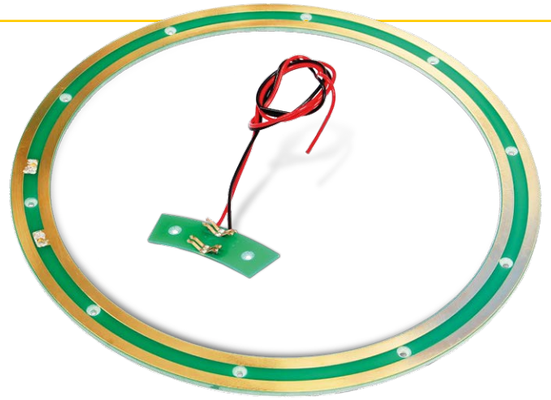

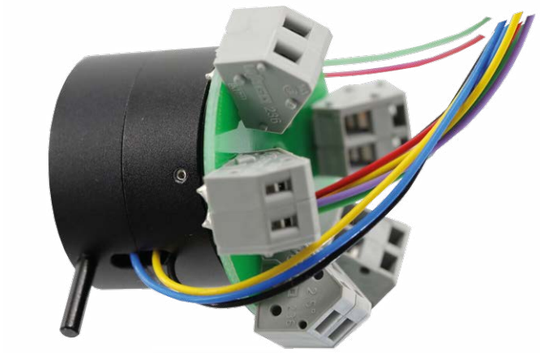

MINIATURE SIZE SLIP RING WAGO CONNECTORS ON PCB

- 16 x 2A signal transmission
- Customized PCB with WAGO connectors for cable connection
- Special housing design with anti-rotation-bar

HYBRID MEDIUM SIZE SLIP RING WITH FIBER OPTIC AND COAX TRANSMISSION

- Customized housing shape with special rotor design
- Gearwheel teeth shape integrated in rotor design
- FORJ Fiber Optic + COAX transmission

MINIATURE SLIP RING WITH CUSTOMIZED FLANGE

- 10 x 2A signal transmission
- Flange position and shape customized
- Cable color code according to customer requirement

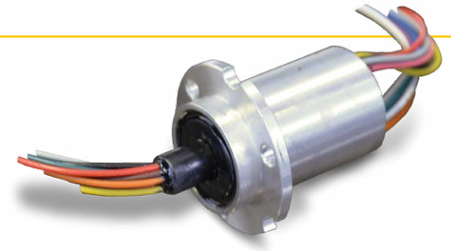

LARGE METAL HOUSING WITH POWER / DATA TRANSMISSION

- Dimensions housing according to customer specification
- 86 Rings (63A, 32A, 16A, HD-SDI, EtherCat, Analogue)
- Special CAT7E data-cable with 10 meter length

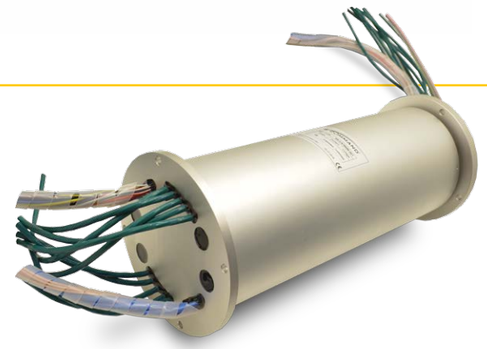

MINIATURE SLIP RING WITH 128 RINGS

- Aluminium housing with rotor flange
- 128 signal rings for data transmission
- Protection degree IP65

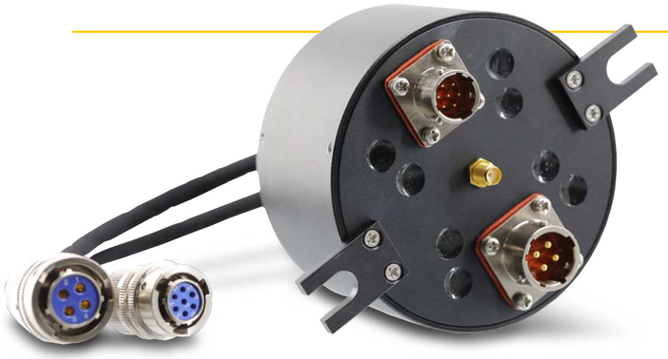

SLIP RING WITH INTEGRATED CONNECTORS

- Customized fixation boreholes
- Customized connectors and cable with connectors
- Double anti-rotation-tab on stator side

HYBRID MEDIUM SIZE SLIP RING WITH DOUBLE COAX LINE AND POWER TRANSMISSION

- Customized metal housing without flange
- 2 x COAX lines + several power rings
- Special cable protection sleeve and cable fixation

HYBRID MEDIUM SIZE SLIP RING WITH FIBER OPTIC AND POWER LINES

- Customized aluminium housing without flange
- FORJ Fiber Optic + power transmission
- Stainless steel rotor with cable protection sleeve

MEDIUM SIZE HOLLOW-SHAFT SLIP RING WITH CONNECTORS

- 4 x customized connectors for signal transmission
- Aluminium housing with 150mm free inner diameter
- Housing without flange, axial cable outtakes

HYBRID MINIATURE SLIP RING FOR VIRTUAL REALITY APPLICATIONS

- Plastic housing with customized flange
- Power and data transmission by USB and HDMI
- Connectors on rotor and stator side for easy usage

Notes

B-COMMAND

Request Form Slip Rings

Please fill in all fields below with as much information about your application as possible. Handing over maximum mechanical and electrical information available makes order creation easier for us. If available you can also provide circuit diagrams or 2D / 3D files of the mounting position. If you have any questions about this form please contact us.

Company Name ..... Contact .....

Address ..... Position .....

..... Phone .....

City ..... Post Code ..... Fax .....

Country ..... E-mail .....

Application area .....

Project name ..... Annual qty (PCS) .....

☐ New development ☐ Replacement existing solution ☐ Repair / maintenance

Application description (How does slip ring work): .....

.....

USING ENVIRONMENT

☐ Indoor ☐ High vibration Temperature range .....

☐ Outdoor ☐ High humidity IP degree (min.) ..... Altitude .....

Other requirements: .....

MECHANICAL PERFORMANCE

Working speed ..... rpm Installation method ☐ Horizontal ☐ Vertical

Max speed ..... rpm Fixation ☐ Shaft ☐ Flange

Operating frequency ..... Through-bore ☐ Yes ☐ No

Max. Outer Diameter ..... mm Housing material .....

Min. Inner Diameter ..... mm Max. pressure (air, liquid) ..... Bar

Max. Length ..... mm Wire length Rotor ..... mm Wire length Stator ..... mm

Other requirements: .....
(or drawings in attachment)

ELECTRICAL PERFORMANCE

No. of Rings	Current (amps)		Working Volts	Contact Material	Data Protocol (Fieldbus)	Gas / Fluidic Transmission	Others
	Normal	Max					

Signal requirements: .....

B-COMMAND GmbH

GRUETZMUEHLENWEG 46
22339 DE HAMBURG

PHONE +49 40-538092-50
FAX +49 40-538092-85
MAIL INFO@B-COMMAND.COM

WWW.B-COMMAND.COM

Realized by lilocrea.fr - 2017